NANLITE

vela 150b LED Bi-color Spot Light

USER MANUAL

Version: V1.0
2026-09-18

Guangdong Nanguang Photo&Video Systems Co., Ltd.

WWW.NANLITE.COM

Revision History

Version	Date (Y-M-D)	Note
V1.0	2026-09-18	File First Publish

Contents

1. Introduction 1
2. Product Overview 2
   2.1. Product Layout 2
   2.2. Specifications 3
   2.3. Includes 4
3. Safety Instructions 5
4. Installing Instructions 7
   4.1. Connecting the Fixture with the Power Outlet 7
   4.2. Connecting the Fixture with the Battery Grip 8
   4.3. Connecting the Fixture with a PD Adapter 8
   4.4. Installing and Detaching the Mounting Bracket 9
   4.5. Installing and Detaching the Fresnel Lens 10
5. Operating Instructions 11
   5.1. On-board Control 11
   5.2. NANLINK APP Control-via Bluetooth 12
   5.3. Menu 13
   5.4. Firmware Update 14
6. Troubleshooting for Common Issues 14

1. Introduction

Thank you for purchasing Nanlite product -- vela 150b!

The vela 150b is a compact and portable LED bi-color spotlight. It supports three power options: AC power, battery grip, and PD adapter. Featuring a wide CCT range from 2700K to 7500K and 9 built-in effects, it adapts effortlessly to photography, video production, livestreaming, and other applications. The fixture supports both on-board and wireless control via the Nanlink App, offering greater flexibility for remote lighting control.

The vela 150b will bring great convenience to your creation and inspire boundless creativity. Before using vela 150b, please read this manual carefully to ensure you can fully utilize all the features. Hope it can work with you to create more brilliant results together.

2. Product Overview

2.1. Product Layout

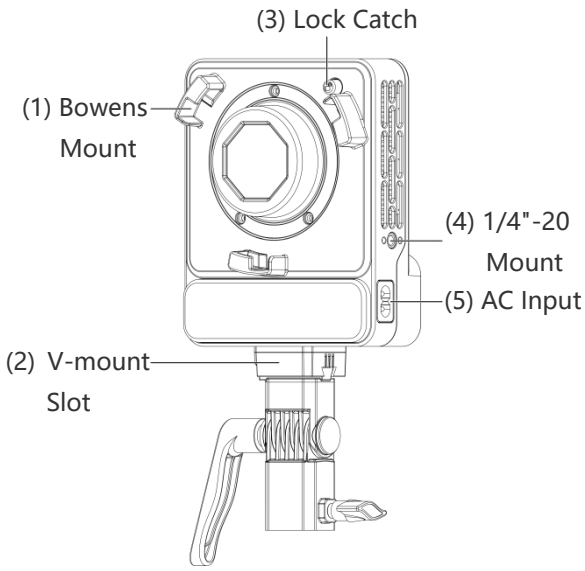

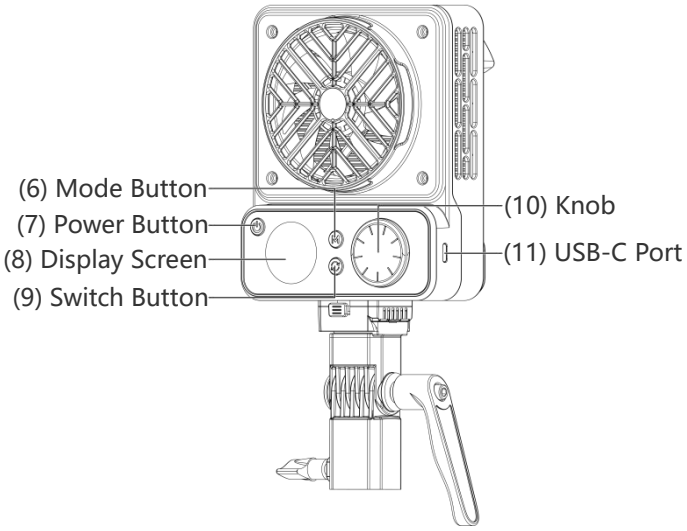

(1) Bowens Mount: For mounting the reflector or other Bowens mount accessories.

(2) V-mount Slot: For securing the V-mount plate on the bracket to the bottom of the fixture.

(3) Lock Catch: For locking or releasing the reflector or other accessories.

(4) 1/4"-20 Mount: For connecting the battery grip or other accessories.

(5) AC Input: For connecting the power.

(6) Mode Button: For switching between CCT, effect modes, and the menu.

(7) Power Button: For turning on/off the fixture.

(8) Display Screen: For displaying the lighting status and settings.

(9) Switch Button: For switching parameters.

(10) Knob: For adjusting parameters.

(11) USB-C Port: For connecting a PD adapter.

2.2. Specifications

Model Name	vela 150b
Rated Power	150W
Input Voltage/Current	AC 100V-240V 50/60Hz, 2.5A Max PD3.1 (12-28V) 30W Min
LED Type	WW
CCT	2700K → 7500K
CRI	Average 96
TLCI	Average 98
TM-30 Rf	Average 95
TM-30 Rg	Average 100
Dimming	0%→100%, by 1% increment
Control	On-board, NANLINK APP
Special Effects	CCT Flash, CCT Pulse, Storm, TV, Paparazzi, Candle/Fire, Bad Bulb, Firework, and Explosion.

2.3. Includes

vela 150b × 1	Mounting Bracket × 1	Fresnel Lens × 1
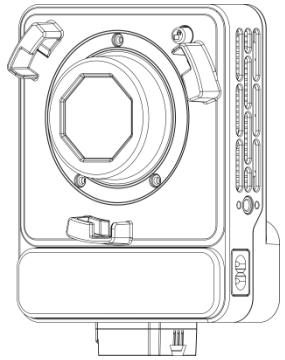	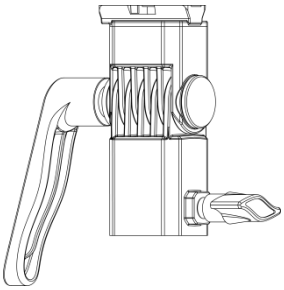	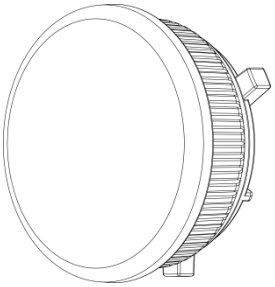
AC Power Cable × 1	User Manual × 1	Carrying Bag × 1
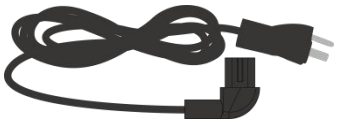		

3. Safety Instructions

Please read and understand all safety instructions before installing or operating the fixture. Always follow the instructions to avoid personal injury and fixture damage.

Electrical:

Danger

Please ensure that the AC current, voltage and frequency comply with the fixture requirements, and make sure the fixture is properly grounded when connected.

Danger

Please use proper and undamaged cables to connect the fixture correctly, avoiding the risk of electric shock or fixture damage.

Danger

Please disconnect the power before moving or transporting the fixture.

Installation:

Danger

Please carefully read the manual and follow the instructions to install the fixture to avoid any unnecessary incidents.

Caution

Please wear appropriate protective gloves when installing or removing the fixture or accessory with high-temperature surfaces.

Caution

Please pay special attention to the impact of wind and take appropriate reinforcement measures when installing outdoors.

Operation:

Danger

Please stop using the fixture immediately if the fixture housings or cables show visible damage.

Danger

Please do not use the fixture near flammable or explosive materials.

Danger

Please be cautious, as the flashing effect may trigger seizures.

Danger

Please keep the fixture away from corrosive liquids or high-pressure steam.

Caution

Please ensure the fixture is used in an environment between -20°C and 40°C; operating outside this temperature range may damage the fixture.

Caution

Please do not cover the ventilation openings during use to prevent the fixture from overheating.

Caution

Please do not look directly at the light source without wearing protective glasses, as this may cause irreversible eye injury.

Caution

Please remind the crew to avoid eye injury caused by accidentally looking directly at the light source before the fixture lights up.

Maintenance:

Danger

Please do not disassemble or repair any part of the fixture on your own, as this will void the warranty. Maintenance and repair work should be carried out by an authorized service center and professional personnel.

Danger

Please disconnect the power before starting any maintenance work.

Caution

Please ensure the fixture is completely dry before transportation or storage after using it in a humid environment.

Notice

Please ensure the fixture is stored away from the following environments or items: extreme temperatures, direct sunlight, high humidity, intense vibrations, dust, strong magnetic fields, and flammable or explosive materials.

Notice

Please transport the fixture and accessories in suitable case to avoid damage.

4. Installing Instructions

4.1. Connecting the Fixture with the Power Outlet

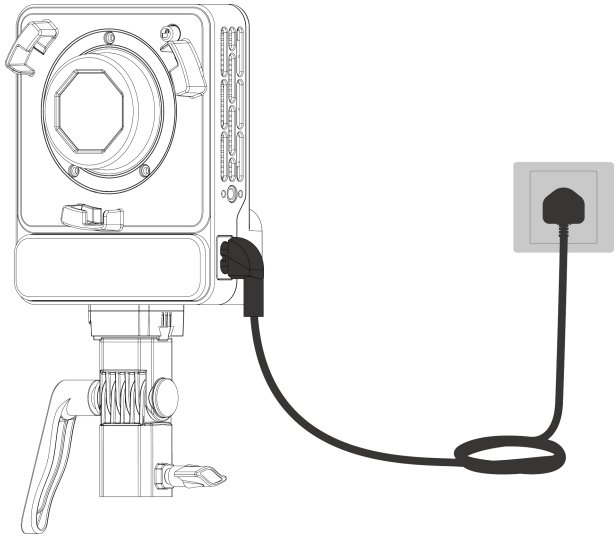

Please ensure the power button is turned off, then connect the AC power cable to the AC input port and the power outlet.

4.2. Connecting the Fixture with the Battery Grip

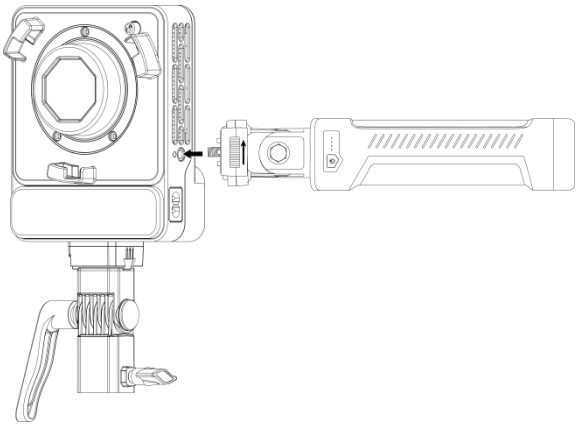

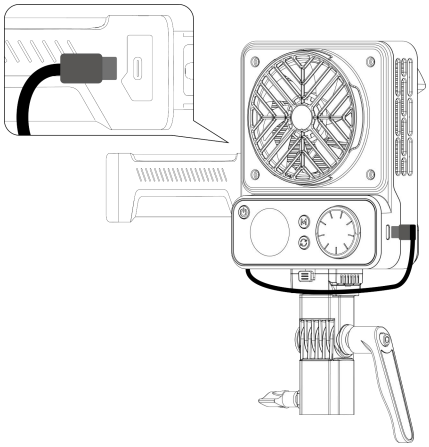

(1) Turn off the fixture, align the 1/4"-20 screw on the battery grip with the 1/4"-20 mount on the fixture, and rotate clockwise to secure.

(2) Connect the USB-C cable to the battery grip and the USB-C port on the fixture.

▲Note: (1) To detach the battery grip, disconnect the USB-C cable first, then rotate the battery grip anticlockwise to remove.

(2) The battery grip and USB-C cable are not included.

4.3. Connecting the Fixture with a PD Adapter

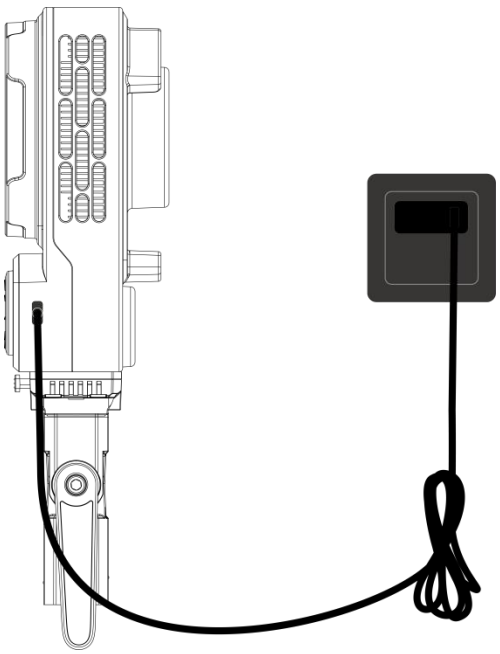

Please ensure the power button is turned off, then connect the USB-C cable to the USB-C port and the PD adapter.

▲Note: The PD adapter should be at least 30W.

4.4. Installing and Detaching the Mounting Bracket

Installation:

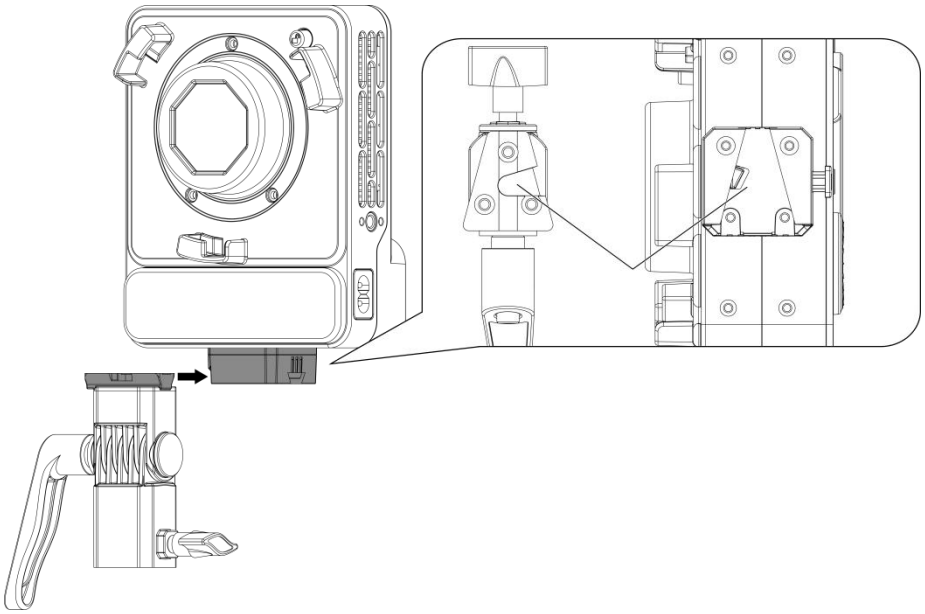

Align the V-mount plate on the bracket with the V-mount slot on the bottom of the fixture, then insert until it clicks into place.

Detachment:

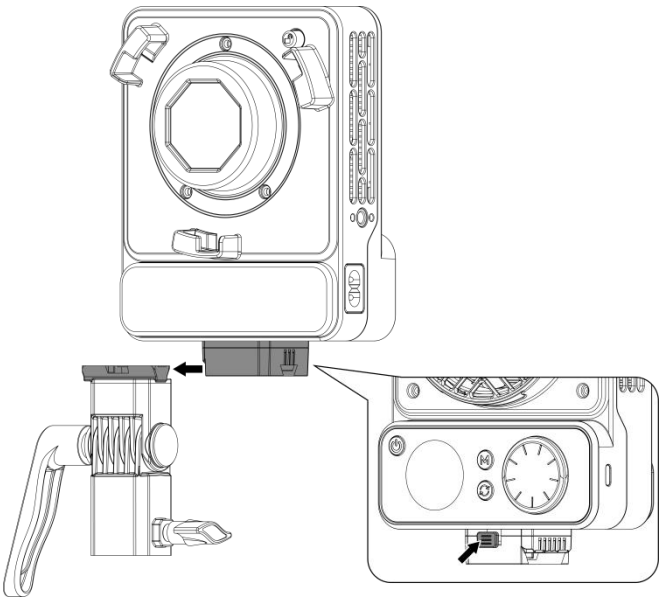

Press the lock catch on the bottom of the fixture while pushing the mounting bracket to remove it from the fixture.

4.5. Installing and Detaching the Fresnel Lens

Installation:

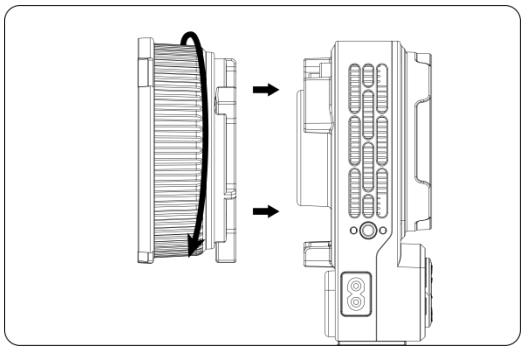

Align the Fresnel lens mount with the fixture's mount and insert, then rotate clockwise until it clicks into place.

Detachment:

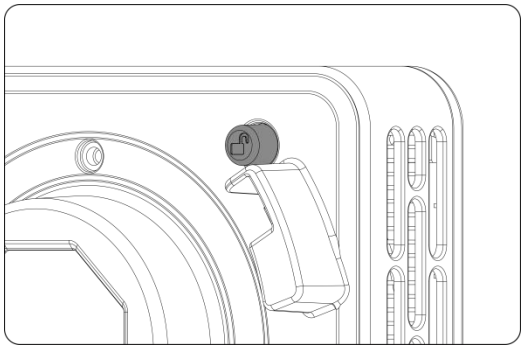

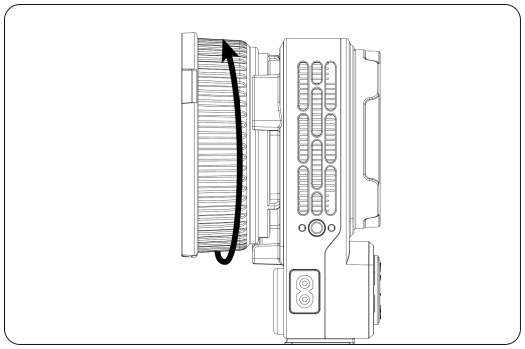

Press the lock catch, and rotate the Fresnel lens anticlockwise to remove it from the fixture.

5. Operating Instructions

Connect the fixture to power, turn on the power button to power up the fixture.

The control panel features three buttons--**Power**, **Mode**, **Switch**, as well as one **knob**.

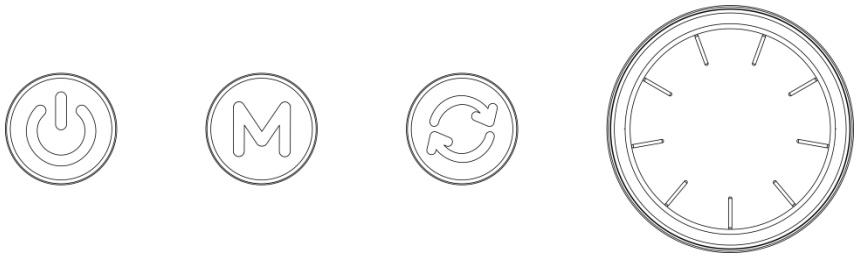

5.1. On-board Control

(1) Interface Switching

Press the **Mode button** to switch to the next mode interface.

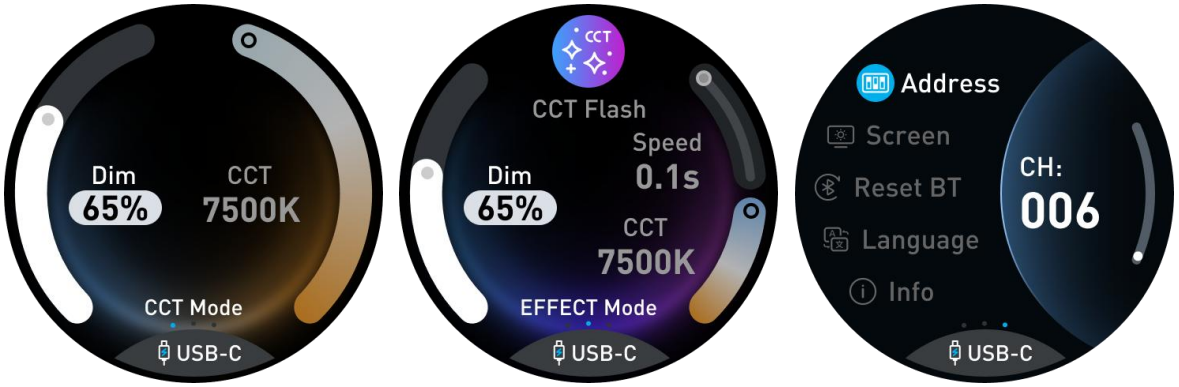

(2) Mode Operation

Press the **Switch button** to select the parameter, and rotate the **knob** to adjust the selected parameter value.

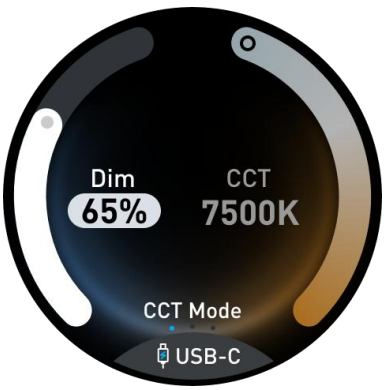

5.2. NANLINK APP Control-via Bluetooth

Turn on the Bluetooth of the phone, enter the NANLINK app, in the scene interface and open the right sidebar to add a fixture: Scene → Menu button at the top right → New Fixture → Via Bluetooth.

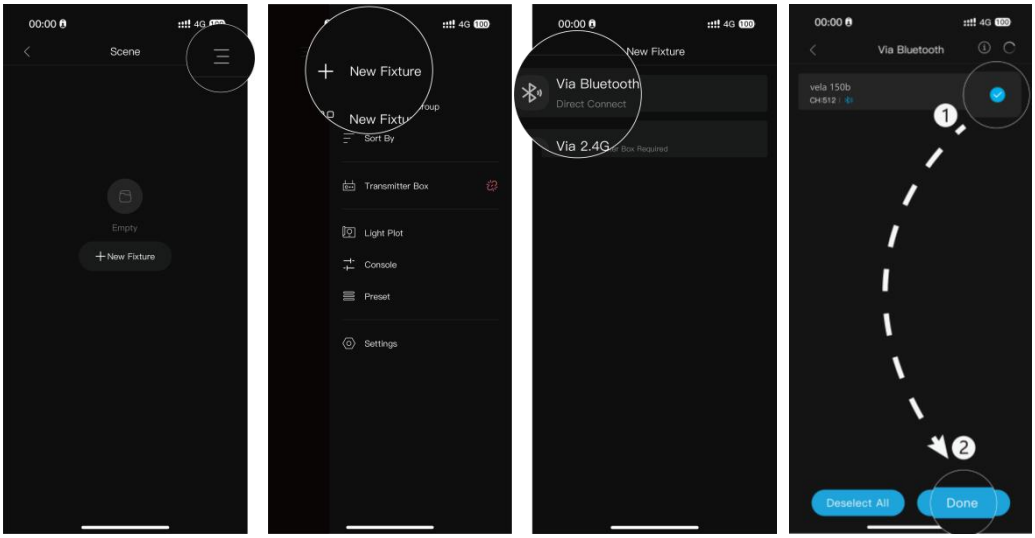

If the fixture is not detected on the app, please reset the Bluetooth on the fixture and try again.

Reset Bluetooth: In the menu, select the Reset Bluetooth, then long press the **Switch button** to reset the Bluetooth.



After connecting via Bluetooth, tap the fixture just added in the fixture list on the app to enter the control interface. Then, tap the mode in the top left corner to switch modes.

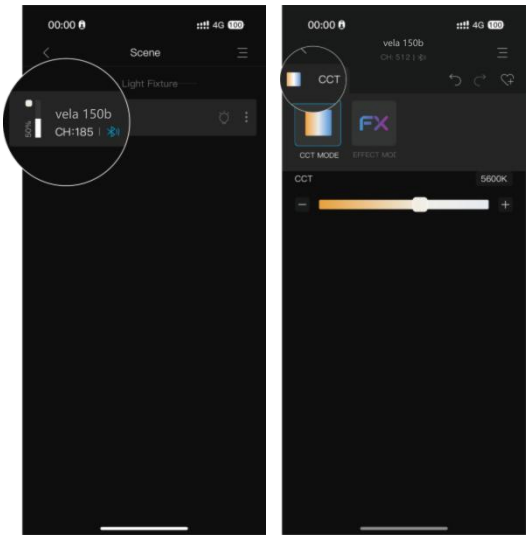

5.3. Menu

In the menu, there are options including Address, Screen Brightness, Reset Bluetooth, Language, and Info.

In the menu, press the **Switch button** to select the menu, then rotate the **Knob** to adjust the parameters or options on the right side. After the operation is complete, the parameters or options will be automatically saved in real-time (except Reset Bluetooth and Fixture Info).



Reset Bluetooth: Press the **Switch button** to select the Reset Bluetooth, then long press the **Switch button** to reset Bluetooth.

Info: Displays the version information of fixture, with no options to operate.

5.4. Firmware Update

Connect the fixture to the phone, download and update the fixture's firmware through the app. The specific steps are as follows:

In the scene list where the fixture is located, tap the menu button on the right side of the navigation bar. In the settings, find Firmware Update and select the fixture that needs to be updated. Once the update is successful, the fixture will automatically restart to complete the firmware update.

▲Note: ①If the instruction "Updated. Restart soon" is displayed, please do not operate, wait for 2s, and the fixture will automatically restart to complete the update.

②If the instruction "Failed. Please retry on the APP" is displayed, please perform the firmware update again on the app.

③If the firmware update still fails after performing the above steps, please contact after-sales technical support.

6. Troubleshooting for Common Issues

Issues	Troubleshooting Guide
The fixture can't power up.	1. Please check whether the connection between the fixture and power outlet is loose. 2. Please check whether the power source voltage and frequency are within the specified range.
The display screen is on, but the fixture cannot be operated.	Please check whether the temperature is too high. Keep the fixture away from heat sources or provide proper ventilation for cooling.
The screen brightness is too low.	1. Please check the screen brightness settings in the menu and adjust to an appropriate level. 2. Please check whether the screen is in sleep mode. Press any **button** or turn the **knob** to activate the screen.

Please scan the QR code for more details.

【Nanlite Website】

【Nanlink App】

WWW.NANLITE.COM

NANLITE

+86-754-85751187 info@nanlite.com Dongli Section, Highway 324, Chenghai, Shantou City, Guangdong Province, China